DC INDUCTIVE PROXIMITY SWITCH SQUARE TYPE

Q5x5x26	Q5x5x26	Q5x5x26
●	●	●
0.8 mm	0.8 mm	0.8 mm
die-cast	die-cast	die-cast
●	●	●
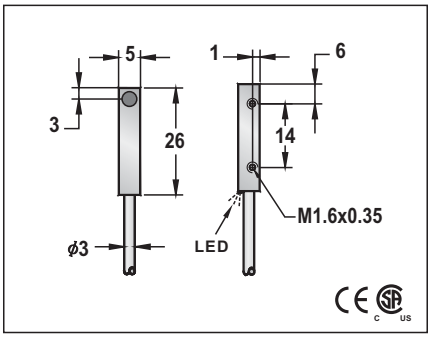	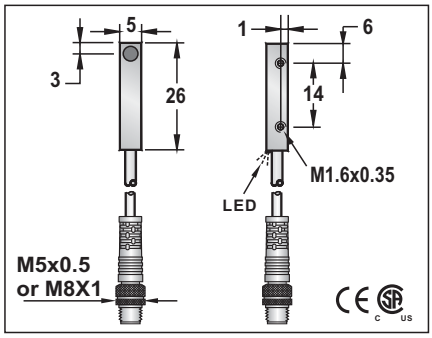	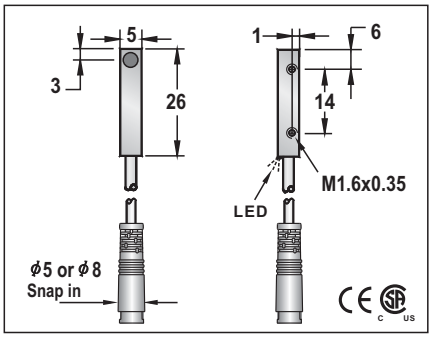
10-30VDC or 5-36VDC	10-30VDC or 5-36VDC	10-30VDC or 5-36VDC
<10%	<10%	<10%
<10mA	<10mA	<10mA
200mA	200mA	200mA
<0.01mA	<0.01mA	<0.01mA
-	-	-
-	-	-
<1.5V	<1.5V	<1.5V
2KHZ	2KHZ	2KHZ
0.1ms/0.1ms	0.1ms/0.1ms	0.1ms/0.1ms
<15%(Sr)	<15%(Sr)	<15%(Sr)
<1.0%(Sr)	<1.0%(Sr)	<1.0%(Sr)
IP67	IP67	IP67
-25°C - +70°C	-25°C - +70°C	-25°C - +70°C
<10%(Sr)	<10%(Sr)	<10%(Sr)
YES	YES	YES
220mA	220mA	220mA
<10ms	<10ms	<10ms
RFI>3V/m / EFT>1KV / ESD>4KV (contact)	RFI>3V/m / EFT>1KV / ESD>4KV (contact)	RFI>3V/m / EFT>1KV / ESD>4KV (contact)
IEC 60947-5-2,Part 7.4.1 / IEC 60947-5-2,Part 7.4.2	IEC 60947-5-2,Part 7.4.1 / IEC 60947-5-2,Part 7.4.2	IEC 60947-5-2,Part 7.4.1 / IEC 60947-5-2,Part 7.4.2
POM	POM	POM

FQM1-550.8N-A3U2T	1	FQM1-550.8N-A3U0.2T/P5	25	FQM1-550.8N-A3U0.2T/P8	29	FQM1-550.8N-A3U0.2T/SN5	25	FQM1-550.8N-A3U0.2T/SN8	29
FQM1-550.8N-B3U2T	2	FQM1-550.8N-B3U0.2T/P5	26	FQM1-550.8N-B3U0.2T/P8	30	FQM1-550.8N-B3U0.2T/SN5	26	FQM1-550.8N-B3U0.2T/SN8	30
FQM1-550.8P-A3U2T	3	FQM1-550.8P-A3U0.2T/P5	27	FQM1-550.8P-A3U0.2T/P8	31	FQM1-550.8P-A3U0.2T/SN5	27	FQM1-550.8P-A3U0.2T/SN8	31
FQM1-550.8P-B3U2T	4	FQM1-550.8P-B3U0.2T/P5	28	FQM1-550.8P-B3U0.2T/P8	32	FQM1-550.8P-B3U0.2T/SN5	28	FQM1-550.8P-B3U0.2T/SN8	32
FQM1-550.8NUT	21	FQM1-550.8NUT/P5	21	FQM1-550.8NUT/P8	21	FQM1-550.8NUT/SN5	21	FQM1-550.8NUT/SN8	21
IQM1-550.8N-A3U2T	1	IQM1-550.8N-A3U0.2T/P5	25	IQM1-550.8N-A3U0.2T/P8	29	IQM1-550.8N-A3U0.2T/SN5	25	IQM1-550.8N-A3U0.2T/SN8	29
IQM1-550.8N-B3U2T	2	IQM1-550.8N-B3U0.2T/P5	26	IQM1-550.8N-B3U0.2T/P8	30	IQM1-550.8N-B3U0.2T/SN5	26	IQM1-550.8N-B3U0.2T/SN8	30
IQM1-550.8P-A3U2T	3	IQM1-550.8P-A3U0.2T/P5	27	IQM1-550.8P-A3U0.2T/P8	31	IQM1-550.8P-A3U0.2T/SN5	27	IQM1-550.8P-A3U0.2T/SN8	31
IQM1-550.8P-B3U2T	4	IQM1-550.8P-B3U0.2T/P5	28	IQM1-550.8P-B3U0.2T/P8	32	IQM1-550.8P-B3U0.2T/SN5	28	IQM1-550.8P-B3U0.2T/SN8	32

NAMUR type specifications see page 23.	FQM***/P5 — M5 Pigtail mode FQM***/P8 — M8 Pigtail mode	FQM***/SN5 — ϕ5 Pigtail mode FQM***/SN8 — ϕ8 Pigtail mode
3.0ϕ3X0.15	3.0ϕ3X0.15	3.0ϕ3X0.15
Approx.30 g	Approx.30 g / Approx.31 g	Approx.30 g / Approx.31 g

Note:
Coming Soon : Part numbers with underline

DC INDUCTIVE PROXIMITY SWITCH SQUARE TYPE

Q5x8x40	Q5x8x40	Q5x8x40
●	●	●
0.8 mm	0.8 mm	0.8 mm
die-cast	die-cast	die-cast
●	●	●
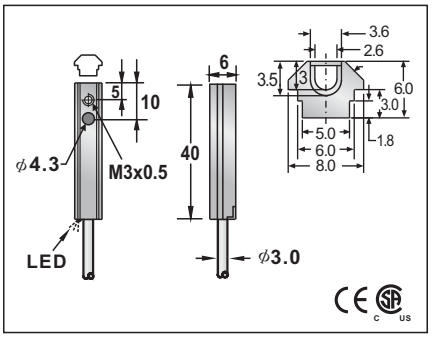	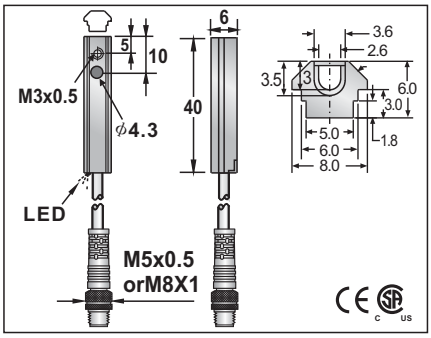	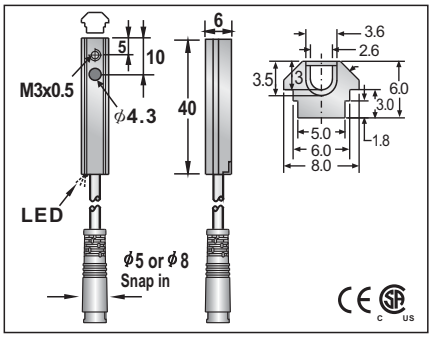
10-30VDC or 5-36VDC	10-30VDC or 5-36VDC	10-30VDC or 5-36VDC
<10%	<10%	<10%
<10mA	<10mA	<10mA
200mA	200mA	200mA
<0.01mA	<0.01mA	<0.01mA
-	-	-
-	-	-
<1.5V	<1.5V	<1.5V
2KHZ	2KHZ	2KHZ
0.1ms/0.1ms	0.1ms/0.1ms	0.1ms/0.1ms
<15%(Sr)	<15%(Sr)	<15%(Sr)
<1.0%(Sr)	<1.0%(Sr)	<1.0%(Sr)
IP67	IP67	IP67
-25°C - +70°C	-25°C - +70°C	-25°C - +70°C
<10%(Sr)	<10%(Sr)	<10%(Sr)
YES	YES	YES
220mA	220mA	220mA
<10ms	<10ms	<10ms
RFI>3V/m / EFT>1KV / ESD>4KV (contact)	RFI>3V/m / EFT>1KV / ESD>4KV (contact)	RFI>3V/m / EFT>1KV / ESD>4KV (contact)
IEC 60947-5-2,Part 7.4.1 / IEC 60947-5-2,Part 7.4.2	IEC 60947-5-2,Part 7.4.1 / IEC 60947-5-2,Part 7.4.2	IEC 60947-5-2,Part 7.4.1 / IEC 60947-5-2,Part 7.4.2
POM	POM	POM

FQM1-580.8N-A3U2T	1	FQM1-580.8N-A3U0.2T/P5	25	FQM1-580.8N-A3U0.2T/P8	29	FQM1-580.8N-A3U0.2T/SN5	25	FQM1-580.8N-A3U0.2T/SN8	29
FQM1-580.8N-B3U2T	2	FQM1-580.8N-B3U0.2T/P5	26	FQM1-580.8N-B3U0.2T/P8	30	FQM1-580.8N-B3U0.2T/SN5	26	FQM1-580.8N-B3U0.2T/SN8	30
FQM1-580.8P-A3U2T	3	FQM1-580.8P-A3U0.2T/P5	27	FQM1-580.8P-A3U0.2T/P8	31	FQM1-580.8P-A3U0.2T/SN5	27	FQM1-580.8P-A3U0.2T/SN8	31
FQM1-580.8P-B3U2T	4	FQM1-580.8P-B3U0.2T/P5	28	FQM1-580.8P-B3U0.2T/P8	32	FQM1-580.8P-B3U0.2T/SN5	28	FQM1-580.8P-B3U0.2T/SN8	32
FQM1-580.8NUT	21	FQM1-580.8NUT/P5	21	FQM1-580.8NUT/P8	21		21		21
IQM1-580.8N-A3U2T	1	IQM1-580.8N-A3U0.2T/P5	25	IQM1-580.8N-A3U0.2T/P8	29	IQM1-580.8N-A3U0.2T/SN5	25	IQM1-580.8N-A3U0.2T/SN8	29
IQM1-580.8N-B3U2T	2	IQM1-580.8N-B3U0.2T/P5	26	IQM1-580.8N-B3U0.2T/P8	30	IQM1-580.8N-B3U0.2T/SN5	26	IQM1-580.8N-B3U0.2T/SN8	30
IQM1-580.8P-A3U2T	3	IQM1-580.8P-A3U0.2T/P5	27	IQM1-580.8P-A3U0.2T/P8	31	IQM1-580.8P-A3U0.2T/SN5	27	IQM1-580.8P-A3U0.2T/SN8	31
IQM1-580.8P-B3U2T	4	IQM1-580.8P-B3U0.2T/P5	28	IQM1-580.8P-B3U0.2T/P8	32	IQM1-580.8P-B3U0.2T/SN5	28	IQM1-580.8P-B3U0.2T/SN8	32

	FQM***/P5 └─M5 Pigtail mode FQM***/P8 └─M8 Pigtail mode	FQM***/SN5 └─ϕ5 Pigtail mode FQM***/SN8 └─ϕ8 Pigtail mode
3ϕ3x0.15	3.0ϕ3X0.15	3.0ϕ3X0.15
Approx.32 g	Approx.30 g / Approx.31 g	Approx.30 g / Approx.31 g

Note:
Coming Soon : Part numbers with underline

DC INDUCTIVE PROXIMITY SWITCH SQUARE TYPE

Q 8		
●		
1.0 mm	2.0 mm	3.0 mm
Nickel plated brass		
●		

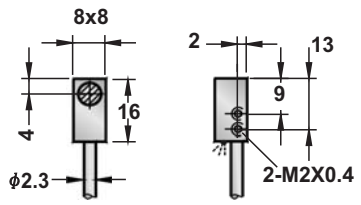

10-30VDC
<10%
<10mA
200mA
<0.01mA
-
-
<1.5V
2KHZ
0.1ms/0.1ms
<15%(Sr)
<1.0%(Sr)
IP67
-25°C - +70°C
<10%(Sr)
YES
220mA
<10ms
RFI>3V/m / EFT>1KV / ESD>4KV (contact)
IEC 60947-5-2,Part 7.4.1 / IEC 60947-5-2,Part 7.4.2
POM

FQM1-8801N-A3R2T	1	EQM1-8802N-A3R2T	1	LQM1-8803N-A3R2T
FQM1-8801N-B3R2T	2	EQM1-8802N-B3R2T	2	LQM1-8803N-B3R2T
FQM1-8801P-A3R2T	3	EQM1-8802P-A3R2T	3	LQM1-8803P-A3R2T
FQM1-8801P-B3R2T	4	EQM1-8802P-B3R2T	4	LQM1-8803P-B3R2T

Note:
All cable type have
pigtail connect mode,
*QM***/ p
pigtail mode

2.3ϕ3x0.15
Approx.20 g

Q 8		
●		
1.0 mm	2.0 mm	3.0 mm
Nickel plated brass		
●		

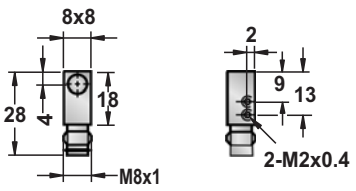

10-30VDC
<10%
<10mA
200mA
<0.01mA
-
-
<1.5V
2KHZ
0.1ms/0.1ms
<15%(Sr)
<1.0%(Sr)
IP67
-25°C - +70°C
<10%(Sr)
YES
220mA
<10ms
RFI>3V/m / EFT>1KV / ESD>4KV (contact)
IEC 60947-5-2,Part 7.4.1 / IEC 60947-5-2,Part 7.4.2
POM

FQM1-8801N-ACR3T	29	EQM1-8802N-ACR3T	29	LQM1-8803N-ACR3T
FQM1-8801N-BCR3T	30	EQM1-8802N-BCR3T	30	LQM1-8803N-BCR3T
FQM1-8801P-ACR3T	31	EQM1-8802P-ACR3T	31	LQM1-8803P-ACR3T
FQM1-8801P-BCR3T	32	EQM1-8802P-BCR3T	32	LQM1-8803P-BCR3T

Connecting cable:
M8 female pico-style screw locking with moulded cable.

Approx.25 g

DC INDUCTIVE PROXIMITY SWITCH SQUARE TYPE

Q 8		
●		
1.0 mm	2.0 mm	3.0 mm
Nickel plated brass		
●		

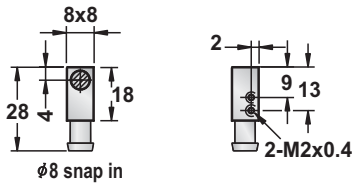

10-30VDC
<10%
<10mA
200mA
<0.01mA
-
-
<1.5V
2KHZ
0.1ms/0.1ms
<15%(Sr)
<1.0%(Sr)
IP67
-25°C - +70°C
<10%(Sr)
YES
220mA
<10ms
RFI>3V/m / EFT>1KV / ESD>4KV (contact)
IEC 60947-5-2,Part 7.4.1 / IEC 60947-5-2,Part 7.4.2
POM

FQM1-8801N-ACR3T/SN	29	EQM1-8802N-ACR3T/SN	29	LQM1-8803N-ACR3T/SN
FQM1-8801N-BCR3T/SN	30	EQM1-8802N-BCR3T/SN	30	LQM1-8803N-BCR3T/SN
FQM1-8801P-ACR3T/SN	31	EQM1-8802P-ACR3T/SN	31	LQM1-8803P-ACR3T/SN
FQM1-8801P-BCR3T/SN	32	EQM1-8802P-BCR3T/SN	32	LQM1-8803P-BCR3T/SN

Connecting cable:
Female pico-style snap-in device with moulded cable.

Approx.20 g

DC INDUCTIVE PROXIMITY SWITCH SQUARE TYPE

Q8	Q8	Q8
●	●	●
1.5 mm	1.5 mm	1.5 mm
die-cast	die-cast	die-cast
●	●	●

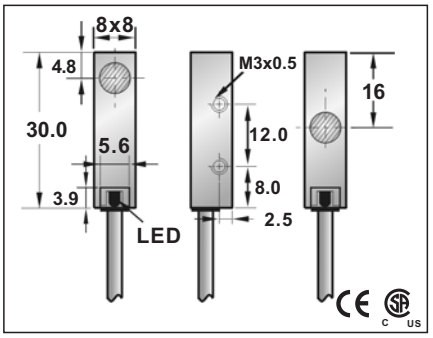

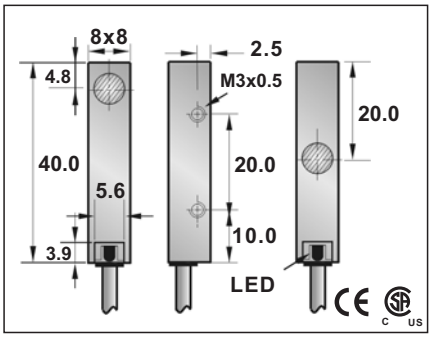

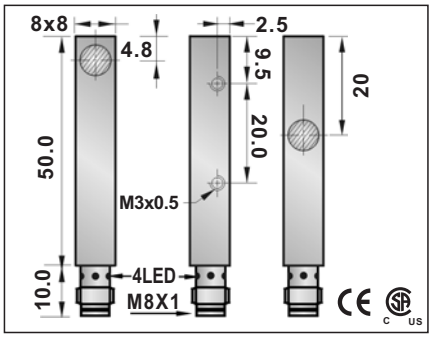

Q8	Q8	Q8
10-30VDC or 5-36VDC	10-30VDC or 5-36VDC	10-30VDC or 5-36VDC
<10%	<10%	<10%
<10mA	<10mA	<10mA
200mA	200mA	200mA
<0.01mA	<0.01mA	<0.01mA
-	-	-
-	-	-
<1.5V	<1.5V	<1.5V
2KHZ	2KHZ	2KHZ
0.1ms/0.1ms	0.1ms/0.1ms	0.1ms/0.1ms
<15%(Sr)	<15%(Sr)	<15%(Sr)
<1.0%(Sr)	<1.0%(Sr)	<1.0%(Sr)
IP67	IP67	IP67
-25°C - +70°C	-25°C - +70°C	-25°C - +70°C
<10%(Sr)	<10%(Sr)	<10%(Sr)
YES	YES	YES
220mA	220mA	220mA
<10ms	<10ms	<10ms
RFI>3V/m / EFT>1KV / ESD>4KV (contact)	RFI>3V/m / EFT>1KV / ESD>4KV (contact)	RFI>3V/m / EFT>1KV / ESD>4KV (contact)
IEC 60947-5-2,Part 7.4.1 / IEC 60947-5-2,Part 7.4.2	IEC 60947-5-2,Part 7.4.1 / IEC 60947-5-2,Part 7.4.2	IEC 60947-5-2,Part 7.4.1 / IEC 60947-5-2,Part 7.4.2
PBT	PBT	PBT

FQM1-881.5N-A3S2T	1	FQM1-881.5N-A3S2M	FQM1-881.5N-A3U2T	1	FQM1-881.5N-A3U2M	FQM1-881.5N-ACU3T	29	FQM1-881.5N-ACU3M
FQM1-881.5N-B3S2T	2	FQM1-881.5N-B3S2M	FQM1-881.5N-B3U2T	2	FQM1-881.5N-B3U2M	FQM1-881.5N-BCU3T	29	FQM1-881.5N-BCU3M
FQM1-881.5P-A3S2T	3	FQM1-881.5P-A3S2M	FQM1-881.5P-A3U2T	3	FQM1-881.5P-A3U2M	FQM1-881.5P-ACU3T	30	FQM1-881.5P-ACU3M
FQM1-881.5P-B3S2T	4	FQM1-881.5P-B3S2M	FQM1-881.5P-B3U2T	4	FQM1-881.5P-B3U2M	FQM1-881.5P-BCU3T	30	FQM1-881.5P-BCU3M
			FQM1-881.5C-A2U2T	7	FQM1-881.5C-A2U2M	FQM1-881.5C-ACU3T	39	FQM1-881.5C-ACU3M
			FQM1-881.5C-B2U2T	8	FQM1-881.5C-B2U2M	FQM1-881.5C-BCU3T	77	FQM1-881.5C-BCU3M
IQM1-881.5N-A3S2T	1	IQM1-881.5N-A3S2M	IQM1-881.5N-A3U2T	1	IQM1-881.5N-A3U2M	IQM1-881.5N-ACU3T	29	IQM1-881.5N-ACU3M
IQM1-881.5N-B3S2T	2	IQM1-881.5N-B3S2M	IQM1-881.5N-B3U2T	2	IQM1-881.5N-B3U2M	IQM1-881.5N-BCU3T	29	IQM1-881.5N-BCU3M
IQM1-881.5P-A3S2T	3	IQM1-881.5P-A3S2M	IQM1-881.5P-A3U2T	3	IQM1-881.5P-A3U2M	IQM1-881.5P-ACU3T	30	IQM1-881.5P-ACU3M
IQM1-881.5P-B3S2T	4	IQM1-881.5P-B3S2M	IQM1-881.5P-B3U2T	4	IQM1-881.5P-B3U2M	IQM1-881.5P-BCU3T	30	IQM1-881.5P-BCU3M

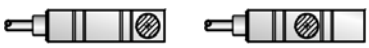

top sensing style center sensing style

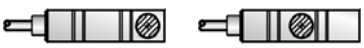

top sensing style center sensing style

top sensing style center sensing style

3.0ϕ3X0.15	3.0ϕ3X0.15	
Approx.38 g	Approx.38 g	Approx.38 g

Note:
Coming Soon : Part numbers with underline

DC INDUCTIVE PROXIMITY SWITCH SQUARE TYPE

Q 12	Q 12	Q 12
●	●	●
2 mm	2 mm	2 mm
die-cast	die-cast	die-cast
●	●	●
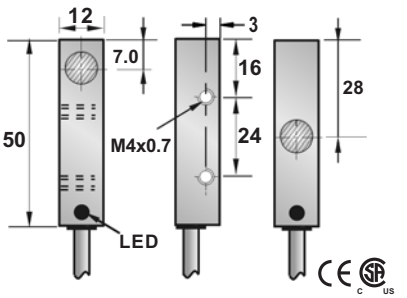	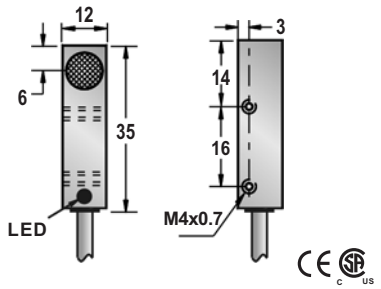	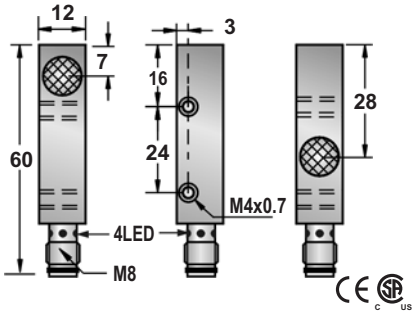
10-30VDC or 5-36VDC or 10-55VDC	10-30VDC or 5-36VDC	10-30VDC or 5-36VDC or 10-55VDC
<10%	<10%	<10%
<10mA <20mA	<10mA	<10mA <20mA
200mA	200mA	200mA
<0.01mA	<0.01mA	<0.01mA
-	-	-
-	-	-
<1.5V or <1.0V or <2.0V	<1.5V(10-30V) or <1.0V(5-36V)	<1.5V or <1.0V or <2.0V
2KHZ	2KHZ	2KHZ
0.1ms/0.1ms	0.1ms/0.1ms	0.1ms/0.1ms
<15%(Sr)	<15%(Sr)	<15%(Sr)
<1.0%(Sr)	<1.0%(Sr)	<1.0%(Sr)
IP67	IP67	IP67
-25 °C - +70 °C	-25°C - +70°C	-25 °C - +70°C
<10%(Sr)	<10%(Sr)	<10%(Sr)
YES	YES	YES
220mA	220mA	220mA
<10ms	<10ms	<10ms
RFI>3V/m / EFT>1KV / ESD>4KV (contact)	RFI>3V/m / EFT>1KV / ESD>4KV (contact)	RFI>3V/m / EFT>1KV / ESD>4KV (contact)
IEC 60947-5-2,Part 7.4.1 / IEC 60947-5-2,Part 7.4.2	IEC 60947-5-2,Part 7.4.1 / IEC 60947-5-2,Part 7.4.2	IEC 60947-5-2,Part 7.4.1 / IEC 60947-5-2,Part 7.4.2
POM	POM	POM

FQM1-1202N-A3U2T	1	FQM1-1202N-A3U2M	FQM1-1202N-A3S2T	1	FQM1-1202N-ACU3T	29	FQM1-1202N-ACU3M
FQM1-1202N-B3U2T	2	FQM1-1202N-B3U2M	FQM1-1202N-B3S2T	2	FQM1-1202N-BCU3T	29	FQM1-1202N-BCU3M
FQM1-1202P-A3U2T	3	FQM1-1202P-A3U2M	FQM1-1202P-A3S2T	3	FQM1-1202P-ACU3T	30	FQM1-1202P-ACU3M
FQM1-1202P-B3U2T	4	FQM1-1202P-B3U2M	FQM1-1202P-B3S2T	4	FQM1-1202P-BCU3T	30	FQM1-1202P-BCU3M
FQM1-1202P-S4U2T	6	FQM1-1202P-S4U2M	FQM1-1202P-S4S2T	6	FQM1-1202P-SCU4T	32	FQM1-1202P-SCU4M
FQM1-1202N-S4U2T	5	FQM1-1202N-S4U2M	FQM1-1202N-S4S2T	5	FQM1-1202N-SCU4T	31	FQM1-1202N-SCU4M
FQM1-1202C-A2U2T	7	FQM1-1202C-A2U2M			FQM1-1202C-ACU3T	39	FQM1-1202C-ACU3M
FQM1-1202C-B2U2T	8	FQM1-1202C-B2U2M			FQM1-1202C-BCU3T	77	FQM1-1202C-BCU3M
HQM1-1202N-A3U2T	1	HQM1-1202N-A3U2M			HQM1-1202N-ACU3T	29	HQM1-1202N-ACU3M
HQM1-1202N-B3U2T	2	HQM1-1202N-B3U2M			HQM1-1202N-BCU3T	29	HQM1-1202N-BCU3M
HQM1-1202P-A3U2T	3	HQM1-1202P-A3U2M			HQM1-1202P-ACU3T	30	HQM1-1202P-ACU3M
HQM1-1202P-B3U2T	4	HQM1-1202P-B3U2M			HQM1-1202P-BCU3T	30	HQM1-1202P-BCU3M
IQM1-1202N-A3U2T	1	IQM1-1202N-A3U2M	IQM1-1202N-A3S2T	1	IQM1-1202N-ACU3T	29	IQM1-1202N-ACU3M
IQM1-1202N-B3U2T	2	IQM1-1202N-B3U2M	IQM1-1202N-B3S2T	2	IQM1-1202N-BCU3T	29	IQM1-1202N-BCU3M
IQM1-1202P-A3U2T	3	IQM1-1202P-A3U2M	IQM1-1202P-A3S2T	3	IQM1-1202P-ACU3T	30	IQM1-1202P-ACU3M
IQM1-1202P-B3U2T	4	IQM1-1202P-B3U2M	IQM1-1202P-B3S2T	4	IQM1-1202P-BCU3T	30	IQM1-1202P-BCU3M
IQM1-1202P-S4U2T	6	IQM1-1202P-S4U2M	IQM1-1202P-S4S2T	6	IQM1-1202P-SCU4T	32	IQM1-1202P-SCU4M
IQM1-1202N-S4U2T	5	IQM1-1202N-S4U2M	IQM1-1202N-S4S2T	5	IQM1-1202N-SCU4T	31	IQM1-1202N-SCU4M

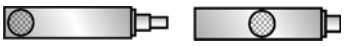 top sensing style center sensing style	Please see Page 18 for details and specifications of DC 2-Wire models on this page.	top sensing style center sensing style
4∅3x0.15	4∅ 3x0.15	
Approx.75 g	Approx.70 g	Approx.38 g

Note:
Coming Soon : Part numbers with underline

DC INDUCTIVE PROXIMITY SWITCH SQUARE TYPE

Q16x28x10		Q16x28x10	
●	○	●	○
1 mm	2 mm	1 mm	2 mm
die-cast		die-cast	
●		●	

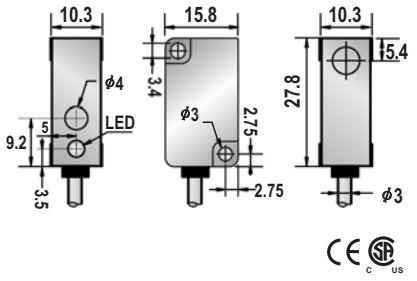

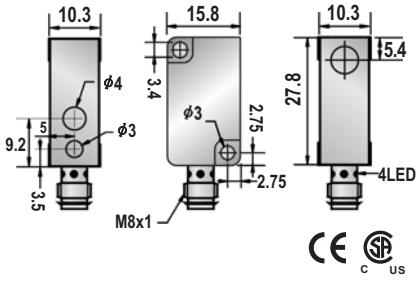

10-30VDC or 5-36VDC			10-30VDC or 5-36VDC		
<10%			<10%		
<10mA			<10mA		
200mA			200mA		
<0.01mA			<0.01mA		
-			-		
-			-		
<1.5V			<1.5V		
2KHZ			2KHZ		
0.1ms/0.1ms			0.1ms/0.1ms		
<15%(Sr)			<15%(Sr)		
<1.0%(Sr)			<1.0%(Sr)		
IP67			IP67		
-25°C - +70°C			-25°C - +70°C		
<10%(Sr)			<10%(Sr)		
YES			YES		
220mA			220mA		
<10ms			<10ms		
RFI>3V/m / EFT>1KV / ESD>4KV (contact)			RFI>3V/m / EFT>1KV / ESD>4KV (contact)		
IEC 60947-5-2,Part 7.4.1 / IEC 60947-5-2,Part 7.4.2			IEC 60947-5-2,Part 7.4.1 / IEC 60947-5-2,Part 7.4.2		
POM			POM		
FQM1-2801N-A3U2	1	FQM2-2802N-A3U2	FQM1-2801N-ACU3	29	FQM2-2802N-ACU3
FQM1-2801N-B3U2	2	FQM2-2802N-B3U2	FQM1-2801N-BCU3	29	FQM2-2802N-BCU3
FQM1-2801P-A3U2	3	FQM2-2802P-A3U2	FQM1-2801P-ACU3	30	FQM2-2802P-ACU3
FQM1-2801P-B3U2	4	FQM2-2802P-B3U2	FQM1-2801P-BCU3	30	FQM2-2802P-BCU3
FQM1-2801C-A2U2	7	FQM2-2802C-A2U2	FQM1-2801C-ACU3	39	FQM2-2802C-ACU3
FQM1-2801C-B2U2	8	FQM2-2802C-B2U2	FQM1-2801C-BCU3	77	FQM2-2802C-BCU3
IQM1-2801N-A3U2	1	IQM2-2802N-A3U2	IQM1-2801N-ACU3	29	IQM2-2802N-ACU3
IQM1-2801N-B3U2	2	IQM2-2802N-B3U2	IQM1-2801N-BCU3	29	IQM2-2802N-BCU3
IQM1-2801P-A3U2	3	IQM2-2802P-A3U2	IQM1-2801P-ACU3	30	IQM2-2802P-ACU3
IQM1-2801P-B3U2	4	IQM2-2802P-B3U2	IQM1-2801P-BCU3	30	IQM2-2802P-BCU3
Please see Page 18 for details and specifications of DC 2-Wire models on this page.					
3.0ϕ3X0.15					
Approx.60 g			Approx.60 g		

Note:
Coming Soon : Part numbers with underline